Summary in Graph

Exam Summary (GATE Overflow CS Test Series 2026 | Mock GATE 4)

Qs. Attempted:	0 (0 + 0)	Correct Marks:	0 (0 + 0)
Correct Attempts:	0 (0 + 0)	Penalty Marks:	0 (0 + 0)
Incorrect Attempts:	0 (0 + 0)	Resultant Marks:	0 (0 + 0)

Total Questions:	65 (30 + 35)
Total Marks:	100 (30 + 70)
Exam Duration:	180 Minutes
Time Taken:	0 Minutes

Individual Question Statistics

Select Metric: Marks Obtained

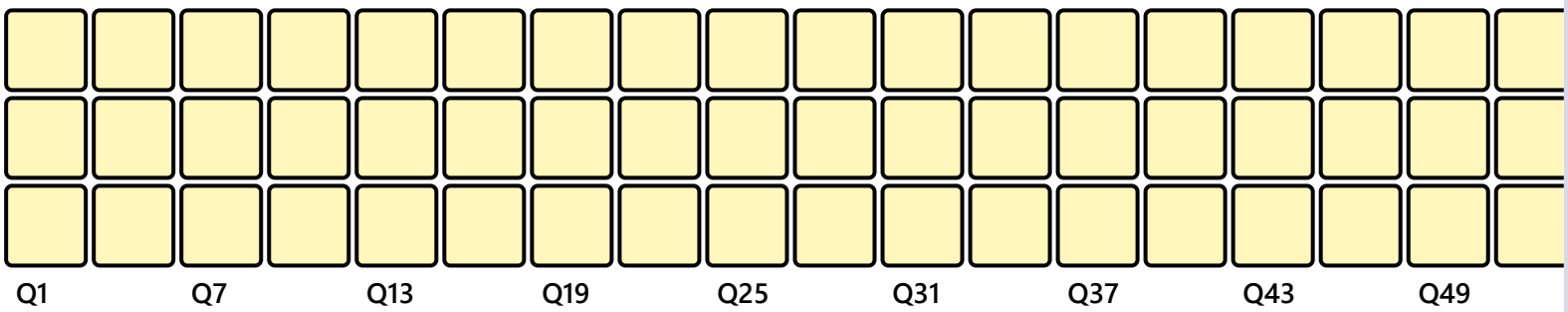

* Average Stats based on first-attempt stats of Top 10% (6) out of 62 users

EXAM RESPONSE EXAM STATS FEEDBACK

Aptitude

Q #1 Multiple Choice Type Award: 1 Penalty: 0.33 Verbal Aptitude

Helioseismology is to Sun what Epidemiology is to _____

A. Earth
B. Medicine
C. Moon
D. Disease

Your Answer: | Correct Answer: D | Not Attempted | Time taken: 00min 00sec | Discuss

Q #2 | Multiple Choice Type | Award: 1 | Penalty: 0.33 | Verbal Aptitude

Two capitalized words which have a certain relationship to each other are given below, followed by four pairs of words. Choose the pair that is related to each other in the same way as the given pair of words.

SIMMER : BOIL

A. Ice : Water
B. Hot : Cold
C. Chill : Freeze
D. Roast : Fry

Your Answer: | Correct Answer: C | Not Attempted | Time taken: 00min 00sec | Discuss

Q #3 | Multiple Choice Type | Award: 1 | Penalty: 0.33 | Verbal Aptitude

Fill in the blanks with the right words:
The _____ judgment caused _____ in the courthouse.

A. forgiving, heated
B. lenient, scoff
C. heavy, brawl
D. controversial, disarray

Your Answer: | Correct Answer: D | Not Attempted | Time taken: 00min 00sec | Discuss

Q #4 | Multiple Choice Type | Award: 1 | Penalty: 0.33 | Quantitative Aptitude

A person's present age is one-seventh of the age of his mother. After 6 years, he will be one-fourth of the age of his mother. How old is the mother at present?

A. 35
B. 28
C. 49
D. 42

Your Answer: | Correct Answer: D | Not Attempted | Time taken: 00min 00sec | Discuss

Q #5 | Multiple Choice Type | Award: 1 | Penalty: 0.33 | Quantitative Aptitude

A person invested $Rs.\ 5041$ by dividing into 3 parts. The rate of interest per annum for the first, second and third parts are $2\%, 7\%$ and 4% respectively. At the end of the year, he got the same simple interest in all three parts. What is the amount of money (rounded to the nearest integer) he invested at 7%?

A. $Rs.\ 994$
B. $Rs.\ 807$
C. $Rs.\ 894$
D. $Rs.\ 934$

Your Answer: | Correct Answer: B | Not Attempted | Time taken: 00min 00sec | Discuss

Q #6 | Multiple Choice Type | Award: 2 | Penalty: 0.67 | Quantitative Aptitude

If the square of the 4th term of an arithmetic progression with common difference (> 1) equals the product of the 5th and 13th terms, then the ratio of the 40th term to the 79th term is ?

A. $9 : 19$
B. $1 : 2$
C. $19 : 9$
D. $2 : 1$

Your Answer: | Correct Answer: A | Not Attempted | Time taken: 00min 00sec | Discuss

Q #7 | Multiple Choice Type | Award: 2 | Penalty: 0.67 | Quantitative Aptitude

The solution for the inequality $5x - 7 < 2x < 13x - 31$ is

A. $\left(-\infty, -\frac{7}{3}\right)$
B. $\left(\frac{31}{3}, \infty\right)$
C. $\left(-\infty, -\frac{31}{11}\right)$
D. No solution

Your Answer: | Correct Answer: D | Not Attempted | Time taken: 00min 00sec | Discuss

Q #8 | Multiple Choice Type | Award: 2 | Penalty: 0.67 | Quantitative Aptitude

A dishonest dealer pretends to sell at the cost price but earns a profit of 53% by under weighing. What weight must he be using for 1 kg?

A. 653.549 gm
B. 653.594 gm
C. 653.593 gm
D. 653.597 gm

Your Answer: | Correct Answer: B | Not Attempted | Time taken: 00min 00sec | Discuss

Q #9 | Numerical Type | Award: 2 | Penalty: 0 | Analytical Aptitude

Every year, a survey of 10000 people is conducted by the World Health Organization (WHO). WHO found that in the years $2016, 2017, 2018, 2019$ and 2020 the percentage of people affected by typhoid were $40\%, 50\%, 45\%, 25\%$ and 20% respectively. WHO also found that every year out of the affected people 50% were students, 20% were house-wives and 30% were drivers. The number of house-wives, students and drivers were in the ratio $25 : 13 : 12$, every year. If α is the year having the minimum number of students not affected by typhoid, the number of students not affected by typhoid among the sample of 10000 in year α is _____

Your Answer: | Correct Answer: 100 | Not Attempted | Time taken: 00min 02sec | Discuss

Q #10 | Numerical Type | Award: 2 | Penalty: 0 | Quantitative Aptitude

The funnel chart given below shows percentage distribution of five different age groups of a particular city.

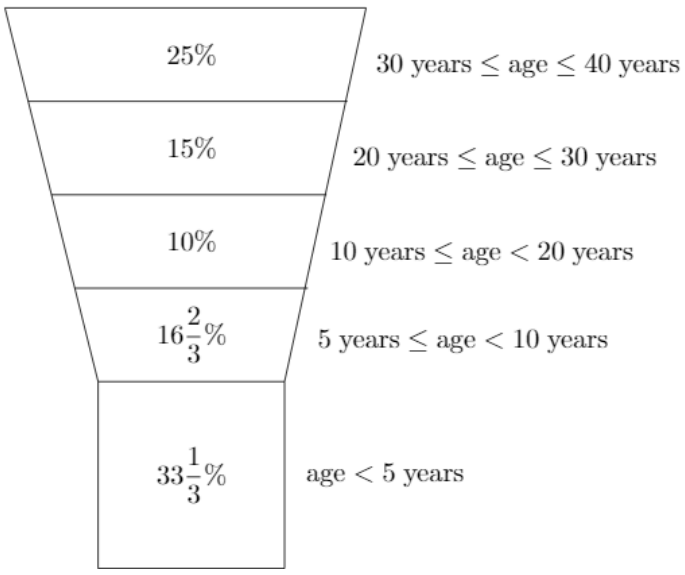

If the total population increases at rate of 5% per annum and the current total population is 1 lakh, what will be the population of age group of $5 \leq x < 20$ after 2 years? [if percentage distribution remains the same]

Your Answer: | Correct Answer: 29399:29401 | Not Attempted | Time taken: 00min 00sec | Discuss

Technical

Q #1 | Multiple Select Type | Award: 1 | Penalty: 0 | Linear Algebra

Mark all the correct statements given below. P is $l \times m$ and Q is $m \times n$ matrices. (Mark all the appropriate choices)

A. rank$(P \times P^T) =$ rank(P)
B. rank$(P \times Q) \leq$ rank(P)
C. rank$(P) \leq \min(l, m)$
D. rank$(0_{n \times n}) = 1$

Your Answer: | Correct Answer: A;B;C | Not Attempted | Time taken: 00min 00sec | Discuss

Q #2 | Multiple Choice Type | Award: 1 | Penalty: 0.33 | Combinatory

How many 10 digit numbers have no two digits the same?

A. $9 * 9!$
B. $10!$
C. $8 * 9!$
D. None of these

Your Answer: | Correct Answer: A | Not Attempted | Time taken: 00min 00sec | Discuss

Q #3 Numerical Type | Award: 1 | Penalty: 0 | Combinatory

If an ordinary generating function sequence is $\{a_n\}_0^\infty = \frac{x}{(1-3x)^2}$. Then $a_4 - a_1$ is equal to _____

Your Answer: | Correct Answer: 107 | Not Attempted | Time taken: 00min 00sec | Discuss

Q #4 Multiple Select Type | Award: 1 | Penalty: 0 | Computer Networks

Which of the following is/are true of the UNIX Socket API? (Mark all the appropriate choices)

A. If a chunk of data written to a TCP socket is smaller than the Maximum Segment Size (MSS), it will all be sent in the same packet.
B. Writing a single message to a UDP socket can result in the network stack sending multiple packets.
C. The socket allocated by the accept() system call is assigned a new port number.
D. We can call connect() on a UDP socket.

Your Answer: | Correct Answer: B;D | Not Attempted | Time taken: 00min 00sec | Discuss

Q #5 Multiple Select Type | Award: 1 | Penalty: 0 | Computer Networks

Which of the following IP address(es) can be assigned to an Internet interface? (Mark all the appropriate choices)

A. $10.180.48.224$
B. $9.255.255.10$
C. $192.168.20.223$
D. $172.16.200.18$

Your Answer: | Correct Answer: B | Not Attempted | Time taken: 00min 00sec | Discuss

Q #6 Multiple Choice Type | Award: 1 | Penalty: 0.33 | Data Structures

What is the worst case time complexity in building a heap of n elements?

A. $\Theta(n \log n)$
B. $\Theta(n^2)$
C. $\Theta(n * \log n * \log n)$
D. $\Theta(n)$

Your Answer: | Correct Answer: D | Not Attempted | Time taken: 00min 00sec | Discuss

Q #7 Numerical Type | Award: 1 | Penalty: 0 | Algorithms

Consider a selection sorting implementation which takes 8 time units for input of size 8. How much time units will it take for an input of size 32?

Your Answer: | Correct Answer: 128 | Not Attempted | Time taken: 00min 00sec | Discuss

Q #8 Multiple Choice Type | Award: 1 | Penalty: 0.33 | Combinatory

How many different ways can eight identical cookies be distributed among three distinct children if each child receives at least two cookies and no more than four cookies?

A. 7
B. 6
C. 8
D. 9

Your Answer: | Correct Answer: B | Not Attempted | Time taken: 00min 00sec | Discuss

Q #9 | Multiple Choice Type | Award: 1 | Penalty: 0.33 | Graph Theory

What is the minimum number of color required to color this graph?

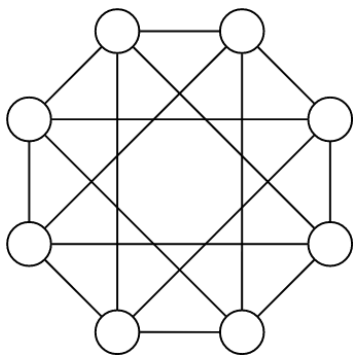

A. 4
B. 3
C. 2
D. 5

Your Answer: | Correct Answer: C | Not Attempted | Time taken: 00min 00sec | Discuss

Q #10 | Numerical Type | Award: 1 | Penalty: 0 | Combinatory

The coefficient of x^4 in the expansion of $(1 + x + x^2 + x^3 + \ldots)^3$ is _____

Your Answer: | Correct Answer: 15 | Not Attempted | Time taken: 00min 00sec | Discuss

Q #11 | Multiple Choice Type | Award: 1 | Penalty: 0.33 | Calculus

The minimum value of the function

$$f(x) = \frac{x^4}{4} - x^2 - 3$$

occurs at

A. $x = 1$
B. $x = \sqrt{2}$
C. $x = 0$
D. $x = \frac{1}{\sqrt{4}}$

Your Answer: | Correct Answer: B | Not Attempted | Time taken: 00min 00sec | Discuss

Q #12 Multiple Choice Type | Award: 1 | Penalty: 0.33 | Graph Theory

In a graph, a vertex is called an articulation point if removing it and all the edges associated with it results in the increase of the number of connected components in the graph. Let G be a graph contain 10 vertices, if G has 8 articulation points then what must be the number of edges in graph G?

A. 45
B. 10
C. 9
D. 8

Your Answer: | Correct Answer: C | Not Attempted | Time taken: 00min 00sec | Discuss

Q #13 Multiple Choice Type | Award: 1 | Penalty: 0.33 | Mathematical Logic

Meera, Priya and David are three students that took the Logic exam. Let's consider a propositional language where p represents “Meera passed the exam”, q represents “Priya passed the exam”,and r represents "David passed the exam".
Which of the following is the formal representation of the sentence “Exactly one, among Meera, Priya and David, passed the exam”?

A. $(p \wedge \neg q \wedge \neg r) \vee (\neg p \wedge q \wedge \neg r) \vee (\neg p \wedge \neg q \wedge r)$
B. $(p \vee \neg q \vee \neg r) \wedge (\neg p \vee q \vee \neg r) \wedge (\neg p \vee \neg q \vee r)$
C. $(p \wedge \neg q \wedge \neg r) \wedge (\neg p \wedge q \wedge \neg r) \wedge (\neg p \wedge \neg q \wedge r)$
D. None of the above

Your Answer: | Correct Answer: A | Not Attempted | Time taken: 00min 00sec | Discuss

Q #14 Multiple Select Type | Award: 1 | Penalty: 0 | Databases

For the relation $R(A, B, C, D)$, on which the following functional dependencies hold $F : \{A \rightarrow B, B \rightarrow C, C \rightarrow A\}, G : \{A \rightarrow BC, B \rightarrow A, C \rightarrow A\}$. Which of the following is correct?(Mark all the appropriate options)

A. F covers G
B. G covers F
C. $F \equiv G$
D. $F \not\equiv G$

Your Answer: | Correct Answer: A;B;C | Not Attempted | Time taken: 00min 00sec | Discuss

Q #15 Multiple Select Type | Award: 1 | Penalty: 0 | Computer Networks

Which of the following is/are correct?(Mark all the appropriate choices)

A. Post Office Protocol (POP) allows you to read the mail only after downloading it.
B. In Post Office Protocol (POP), the mail can only be accessed from a single device at a time.
C. In Internet Message Access Protocol (IMAP), the messages can be accessed across multiple devices.
D. In Internet Message Access Protocol (IMAP), the mail content can be read partially before downloading.

Your Answer: | Correct Answer: A;B;C;D | Not Attempted | Time taken: 00min 00sec | Discuss

Q #16 Multiple Choice Type | Award: 1 | Penalty: 0.33 | Programming in C

What is the output of the following program?

```
#include<stdio.h>
int main()
{
    int i=0;
    for(i++;i==1;i=2)
    printf("Inside loop ");
    printf("Outside loop");
    return 0;
}
```

A. Inside loop Outside loop
B. Outside loop
C. Infinite times Inside loop
D. Syntax error in for loop statement

Your Answer: | Correct Answer: A | Not Attempted | Time taken: 00min 00sec | Discuss

Q #17 Multiple Select Type | Award: 1 | Penalty: 0 | Theory of Computation

Which of the following statements is/are TRUE? Assume no end markers are available for the input strings. (Mark all the appropriate choices)

A. The class of language accepted by non-deterministic finite automata and deterministic finite automata are the same.
B. The class of language accepted by non-deterministic finite push down automata and deterministic finite push down automata are the same.
C. The class of language accepted by non-deterministic finite push down automata accepting by final state and non-deterministic finite push down automata accepting by empty stack are the same.
D. The class of language accepted by deterministic finite push down automata accepting by final state and deterministic finite push down automata accepting by empty stack are the same.

Your Answer: | Correct Answer: A;C | Not Attempted | Time taken: 00min 00sec | Discuss

Q #18 Multiple Choice Type | Award: 1 | Penalty: 0.33 | Set Theory & Algebra

Which of the following is a valid partition of the set $\{1, 2, 3, 4, 5, 6\}$?

A. $\{1, 2\}\{2, 3, 4\}\{4, 5, 6\}$
B. $\{2, 4, 6\}\{1, 3, 5\}$
C. $\{1, 4, 5\}\{2, 6\}$
D. $\{2\}\{3, 6\}\{4, 5\}$

Your Answer: | Correct Answer: B | Not Attempted | Time taken: 00min 00sec | Discuss

Q #19 Multiple Choice Type | Award: 1 | Penalty: 0.33 | Mathematical Logic

Which of the following formulas is a Correct formalization of the sentence:
"There is a book which is not used by any student"
Here, $Uses(x, y)$ denotes x uses y

A. $\exists x(Book(x) \ \wedge \ \forall y(\neg Student(y) \ \wedge \neg Uses(y, x)))$

B. $\exists x(Book(x) \rightarrow \forall y(Student(y) \rightarrow \neg Uses(y,x)))$
C. $\exists x(Book(x) \wedge \forall y(Student(y) \rightarrow \neg Uses(y,x)))$
D. None of the above

Your Answer: | Correct Answer: C | Not Attempted | Time taken: 00min 00sec | Discuss

Q #20

Multiple Choice Type | Award: 1 | Penalty: 0.33 | Programming in C

What is the output of the following program when run on a 64 bit environment?

```c
#include<stdio.h>
#include<string.h>
int main()
{
    char *a= "GATE 2021";
    char b[ ]="GATE 2021";
    printf("%d %d %d %d %d",
       strlen(a),strlen(b),sizeof(*a),
       sizeof(a),sizeof(b));
}
```

A. $9\ 9\ 9\ 1\ 10$
B. $9\ 9\ 1\ 2\ 12$
C. $9\ 9\ 1\ 8\ 10$
D. Possible runtime error

Your Answer: | Correct Answer: C | Not Attempted | Time taken: 00min 00sec | Discuss

Q #21

Multiple Choice Type | Award: 1 | Penalty: 0.33 | Set Theory & Algebra

Consider a Poset on set $A = \{a_1, a_2, \ldots, a_n, x, y\}$ such that

- $x \leq a_i$ for $i = 1, 2, 3, 4, \ldots, n$
- $a_i \leq y$ for $i = 1, 2, 3, 4, \ldots, n$

For any given values of x and y, the number of ways in which the given partial order can be converted to a Totally Ordered Set is _____

A. $n!$
B. $(n+1)!$
C. n
D. 1

Your Answer: | Correct Answer: A | Not Attempted | Time taken: 00min 00sec | Discuss

Q #22

Multiple Choice Type | Award: 1 | Penalty: 0.33 | Programming in C

Consider the following C program:

```c
#include<stdio.h>
#include<string.h>
int main()
{
    int x = 1;
    char *y;
    y=(char*)&x;
    if(*y == 1)
        printf("%s", "yes");
    else
        printf("%s","no");
    return 0;
}
```

What will be the output of the above code?

A. yes
B. no
C. Output depends on the system
D. Undefined behavior

Your Answer: | Correct Answer: C | Not Attempted | Time taken: 00min 00sec | Discuss

Q #23 Multiple Choice Type | Award: 1 | Penalty: 0.33 | Operating System

Consider a FAT file system where disk is divided into M byte blocks, and every FAT entry can store an N bit block number. What is the maximum size of a disk partition that can be managed by such a FAT design?

A. $2^M * N$ bytes
B. $2^N * M$ bytes
C. $2^N * 2^M$ bytes
D. $N * M$ bytes

Your Answer: | Correct Answer: B | Not Attempted | Time taken: 00min 00sec | Discuss

Q #24 Multiple Select Type | Award: 1 | Penalty: 0 | CO & Architecture

Which one of the following is/are correct? (Mark all the appropriate choices)

A. Compulsory misses can be reduced by increasing the total cache size.
B. Capacity misses can be reduced by increasing the block size.
C. Conflict misses may be reduced by increasing the value of associativity.
D. Compulsory misses can be reduced by increasing the cache block size.

Your Answer: | Correct Answer: C;D | Not Attempted | Time taken: 00min 00sec | Discuss

Q #25 Multiple Choice Type | Award: 1 | Penalty: 0.33 | CO & Architecture

A computer system has a $16K$ word cache organized in block-set-associative manner with 4 blocks per set, 32 words per block. The number of bits in the SET and WORD fields of the main memory address format is:

A. $6, 4$
B. $4, 5$
C. $5, 5$
D. $7, 5$

Your Answer: | Correct Answer: D | Not Attempted | Time taken: 00min 00sec | Discuss

Q #26 | Multiple Choice Type | Award: 2 | Penalty: 0.67 | Linear Algebra

Consider the system of equations given below:

- $2x_1 + 4x_2 + x_3 + 2.6x_4 = 0$
- $2.6x_1 + 4.6x_2 + 1.6x_3 + 3.2x_4 = 0$
- $x_1 + 2x_2 + 3x_3 + 3.6x_4 = 0$
- $3.2x_1 + 5.2x_2 + 2.2x_3 + 3.8x_4 = 0$

The number of independent solutions of the system of equations is?

A. 1
B. 2
C. 3
D. 4

Your Answer: | Correct Answer: A | Not Attempted | Time taken: 00min 00sec | Discuss

Q #27 | Numerical Type | Award: 2 | Penalty: 0 | Algorithms

A hash table is given with 4 elements. Linear Probing is used for collision avoidance. A biased coin is tossed with the probability of appearance of head being $\frac{1}{5}$. An element is added to the table if it is head otherwise one element is removed. What is the chance that after 4 trials the load factor of the hash table remains same? (Up to three decimal points)

Your Answer: | Correct Answer: 0.15:0.16 | Not Attempted | Time taken: 00min 00sec | Discuss

Q #28 | Multiple Choice Type | Award: 2 | Penalty: 0.67 | Algorithms

Consider the following C function.

```c
int func(int n)
{
    int i, j, k, p, q=1;
    for(i=1 ; i<= n;i=i+1)
    {
        p=0;
        for(k=1 ; k <= n ; k=k+2)
            p++;
        for(j=n ; j>= 1 ; j=j/2)
            q=q*2;
    }
    return q;
}
```

Which one of the following is the approximate value return by the above function?

A. $\Theta(n^2)$
B. $\Theta(n^n)$
C. $\Theta(2^{n^2})$
D. $\Theta(2^{n \log \log n})$

Your Answer: | Correct Answer: B | Not Attempted | Time taken: 00min 00sec | Discuss

Q #29 | Numerical Type | Award: 2 | Penalty: 0 | Computer Networks

Consider a network with five nodes, N_1 to N_5, as shown as below.

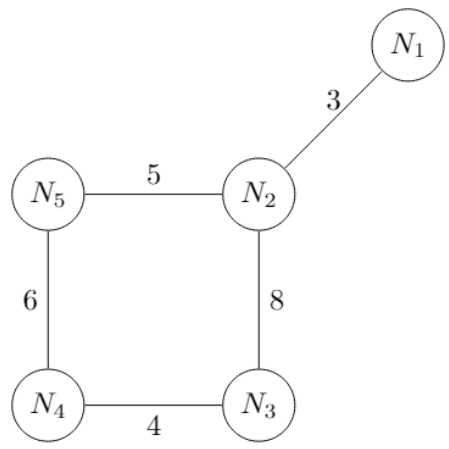

The network uses a Distance Vector Routing protocol. Once the routes have been stabilized, the distance vectors at different nodes are as follows.

$N_1 : (0, 3, 11, 14, 8)$
$N_2 : (3, 0, 8, 11, 5)$
$N_3 : (11, 8, 0, 4, 10)$
$N_4 : (14, 11, 4, 0, 6)$
$N_5 : (8, 5, 10, 6, 0)$

Each distance vector is the distance of the best known path at that instance to nodes, N_1 to N_5, where the distance to itself is 0. Also, all links are symmetric and the cost is identical in both directions. In each round, all nodes exchange their distance vectors with their respective neighbors. Then all nodes update their distance vectors. In between two rounds, any change in cost of a link will cause the two incident nodes to change only that entry in their distance vectors.

The cost of link $N_5 - N_2$ reduces to 4 (in both directions). After the next round of updates, the link $N_1 - N_2$ goes down. N_2 will reflect this change immediately in its distance vector as cost, ∞. After the next round of update, the cost to N_1 in the distance vector of N_5 is _____

Your Answer: | Correct Answer: 20 | Not Attempted | Time taken: 00min 00sec | Discuss

Q #30 | Numerical Type | Award: 2 | Penalty: 0 | CO & Architecture

Consider an instruction pipeline with five stages without any branch prediction: Fetch Instruction(FI), Decode Instruction(DI), Fetch Operand(FO), Execute instruction(EI) and Write Operand(WO). The stage delays for FI, DI, FO, EI and WO are $4 \text{ ns}, 5 \text{ ns}, 11 \text{ ns}, 7 \text{ ns}$, and 6 ns respectively. There are intermediate storage buffers after each stage and the delay of each buffer is 2 ns. A program consisting of 12 instructions $I_1, I_2, \ldots I_{12}$ is executed in this pipelined processor. Instruction I_4 is the only branch instruction and its branch target is I_{10}. If the branch is taken during the execution of this program, the time (in ns) needed to complete the program is _____

Your Answer: | Correct Answer: 182 | Not Attempted | Time taken: 00min 00sec | Discuss

Q #31 | Numerical Type | Award: 2 | Penalty: 0 | Operating System

Consider the following page reference string:

$$7, 2, 3, 1, 2, 5, 3, 4, 6, 7, 7, 1$$

Assume demand paging with three frames, and all frames being initially empty, so the first unique page access cause a page fault.

If α is the number of page faults in optimal page replacement and β is the number of page faults in LRU page replacement, the value of $\alpha - \beta$ is _____

Your Answer: | Correct Answer: -2 | Not Attempted | Time taken: 00min 00sec | Discuss

Q #32 | Multiple Choice Type | Award: 2 | Penalty: 0.67 | Databases

Let $R(A, B, C, D, E, G)$ be a relational schema with the following functional dependencies: $\{AB \rightarrow C, AC \rightarrow B, AD \rightarrow E, B \rightarrow D, BC \rightarrow A, E \rightarrow G, C \rightarrow D, A \rightarrow G, D \rightarrow E\}$ and The decomposition of R into $(A, B, C), (A, B, D, E), (E, G)$

A. gives a lossless join, and is dependency preserving.
B. gives a lossless join, but is not dependency preserving.
C. does not give a lossless join, but is dependency preserving
D. does not give a lossless join and is not dependency preserving.

Your Answer: | Correct Answer: B | Not Attempted | Time taken: 00min 00sec | Discuss

Q #33 | Multiple Choice Type | Award: 2 | Penalty: 0.67 | Programming in C

What is the value returned by the below function when invoked as $fun(20, 1)$?

```
int fun(int x,int y)
{
    if(x/2==0)
        return 0;
    else if(x%2)
        return fun(x/2,3*y) + x + y;
    else
        return fun(x/2,2*y) + x + y;
}
```

A. 48
B. 49
C. 54
D. 56

Your Answer: | Correct Answer: D | Not Attempted | Time taken: 00min 00sec | Discuss

Q #34 | Multiple Choice Type | Award: 2 | Penalty: 0.67 | Programming in C

What is the output of the following program?

```c
#include<stdio.h>
void fun1(int *x);
void fun2(int *y);
int a;
int main()
{
    a=5;
    fun1(&a);
    printf("%d\n",a);
    return 0;
}
void fun1(int *b)
{
    int a = *b-2;
    fun2(&a);
    *b = a+1;
    printf("%d",a);
}
void fun2(int *c)
{
    *c-=a;
    printf("%d",*c);
}
```

A. 420
B. $-2-2-1$
C. -234
D. $-2-1-1$

Your Answer: | Correct Answer: B | Not Attempted | Time taken: 00min 00sec | Discuss

Q #35 Multiple Choice Type | Award: 2 | Penalty: 0.67 | Algorithms

What is time complexity of Dijkstra's algorithm if we use sorted linked list instead of min-heap or priority queue. Assume graph $G(V,E)$ is represented by an adjacency list and $|V| = v$ and $|E| = e$.

A. $\Theta((v+e)\log v)$
B. $\Theta(v^2 + e\log v)$
C. $\Theta(v.e)$
D. $\Theta(v^2)$

Your Answer: | Correct Answer: C | Not Attempted | Time taken: 00min 00sec | Discuss

Q #36 Multiple Select Type | Award: 2 | Penalty: 0 | Algorithms

Let G be an undirected connected graph with distinct edge weights. Let $e_{\max}$ and $e_{\min}$ be the edges with maximum and minimum edge weights. Which of the following statements is/are TRUE? (Mark all the appropriate choices)

A. If $e_{\min}$ is present in some cycle then every Minimum Spanning Tree (MST) of G must include $e_{\min}$.
B. $e_{\max}$ will must be absent in every MST.
C. G will have a unique MST if $e_{\max}$ is present in MST.
D. MST of G will never contain $e_{\min}$ and $e_{\max}$ at the same time.

Your Answer: | Correct Answer: A;C | Not Attempted | Time taken: 00min 00sec | Discuss

Q #37 Numerical Type | Award: 2 | Penalty: 0 | Algorithms

An undirected graph $G(V, E)$ contains $n(n > 2)$ nodes named as $1, 2, 3, 4, \ldots, n$. Two vertices are adjacent if $0 <| i - j |\leq 2$. All the edge weights is unity. How many MST are possible for $n = 4$?

Your Answer: | Correct Answer: 8 | Not Attempted | Time taken: 00min 00sec | Discuss

Q #38 Multiple Choice Type | Award: 2 | Penalty: 0.67 | Algorithms

A contractor has to get completed a task of w units. He assigns Mr. X for this work. Further Mr. X divides this work into 3 people because a person takes responsibility to do the work only if it is a single unit of work, otherwise, he divides the work among 3 people such that first one performs half of the work and second person performs the one third of the work and the remaining work is being performed by the third person. And, in assigning w units of work to some persons, it costs w rupees. The total expenditure to perform the task will be

A. $\Theta(\log(w))$
B. $\Theta(2^{(w)} \log^2(w))$
C. $\Theta(w \log(w))$
D. $\Theta(2^{2\log(w)} \log^2(w))$

Your Answer: | Correct Answer: C | Not Attempted | Time taken: 00min 00sec | Discuss

Q #39 Numerical Type | Award: 2 | Penalty: 0 | Computer Networks

Let in a network the router has been connected in tree topology, such that the structure creates a full binary tree with 16 routers at leaves. (A full binary tree has all level full). The routers at last but one level to detect the routers at the same level sends ICMP packets to other routers. The minimum possible TTL value is set. What is the expected value of TTL for successful detection?

Your Answer: | Correct Answer: 4.85:4.86 | Not Attempted | Time taken: 00min 00sec | Discuss

Q #40 Multiple Choice Type | Award: 2 | Penalty: 0.67 | Operating System

Consider the following synchronization solution for Producer-Consumer problem. Here, counter is a shared variable initialized to 0, buffer is the shared memory region and increment and decrement operations take place atomically.

```
Consumer process
item nextConsumed;
while (1) {
    while (counter == 0);
    nextConsumed = buffer[out];
    out = (out + 1) % BUFFER_SIZE;
    counter--;
}
Producer process
item nextProduced;
while (1) {
    while (counter == BUFFER_SIZE);
    buffer[in] = nextProduced;
    in = (in + 1) % BUFFER_SIZE;
    counter++;
}
```

Which of the following is correct?

A. Race condition may be possible.
B. The solution works fine for Producer Consumer problem.
C. Progress is violating.
D. Buffer overflow is possible.

Your Answer: | Correct Answer: B | Not Attempted | Time taken: 00min 00sec | Discuss

Q #41 | Numerical Type | Award: 2 | Penalty: 0 | Probability

A fair die is thrown as long as necessary for 6 to turn up. If the number of throws (n) turns out to be odd, the probability that $n = 5$ is _____ (rounded to three decimal places)

Your Answer: | Correct Answer: 0.147:0.148 | Not Attempted | Time taken: 00min 00sec | Discuss

Q #42 | Multiple Choice Type | Award: 2 | Penalty: 0.67 | Compiler Design

Consider the basic block given below:

```
    p = a + b
    q = p - c
    p = q * d
    p = e - p
5.  q = q + c
```

The minimum number of nodes and edges present in the DAG representation of the above basic block respectively are _____

A. 6 and 6
B. 11 and 10
C. 7 and 8
D. 9 and 8

Your Answer: | Correct Answer: D | Not Attempted | Time taken: 00min 00sec | Discuss

Q #43 | Numerical Type | Award: 2 | Penalty: 0 | Computer Networks

An IP router with a Maximum Transmission Unit (MTU) of 1400 bytes bytes has received an IP packet of size 3204 bytes with an IP header of length 20 bytes. If the values of the datagram length and offset fields of the last IP fragment are α and β respectively, then $\alpha + 3\beta =$_____

Your Answer: | Correct Answer: 1484 | Not Attempted | Time taken: 00min 00sec | Discuss

Q #44 | Numerical Type | Award: 2 | Penalty: 0 | Probability

A certain family has 6 children, consisting of 3 boys and 3 girls. Assuming that all birth orders are equally likely with no twins, what is the probability that the 2 eldest children are girls? (Up to 2 decimal places)

Your Answer: | Correct Answer: 0.2:0.21 | Not Attempted | Time taken: 00min 00sec | Discuss

Q #45 Numerical Type | Award: 2 | Penalty: 0 | Operating System

A disk has 6 equidistant tracks. The diameters of the innermost and outermost tracks are 1 cm and 5 cm respectively. The innermost track has a storage capacity of 20 MB. If the disk has 25 sectors per track and is currently at the end of the 3rd sector of the inner-most track and the head can move at a speed of 10 meters/sec and it is rotating at constant linear velocity of 7200 RPM, the time (in milliseconds) it will take to read 16 MB contiguous data starting from the sector 2 of the outer-most track will be _____ (rounded to 2 decimal places)

Your Answer: | Correct Answer: 8.99:9.01 | Not Attempted | Time taken: 00min 00sec | Discuss

Q #46 Multiple Choice Type | Award: 2 | Penalty: 0.67 | Digital Logic

In the sequential circuit shown below, if the initial value of the output Q_0Q_1 is 01, what are the next five values of Q_0Q_1?

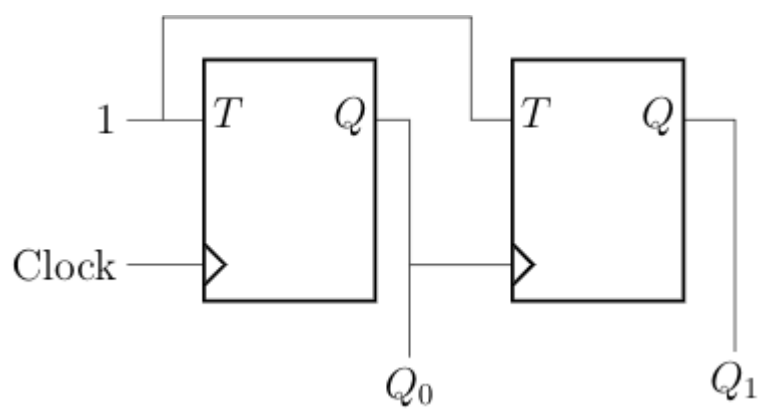

A. $11, 01, 10, 00, 11$
B. $00, 01, 00, 01, 00$
C. $10, 00, 11, 01, 10$
D. $11, 10, 01, 00, 11$

Your Answer: | Correct Answer: C | Not Attempted | Time taken: 00min 00sec | Discuss

Q #47 Multiple Choice Type | Award: 2 | Penalty: 0.67 | Digital Logic

The following circuit implements a two-input $NAND$ gate using two 2×1 multiplexers.

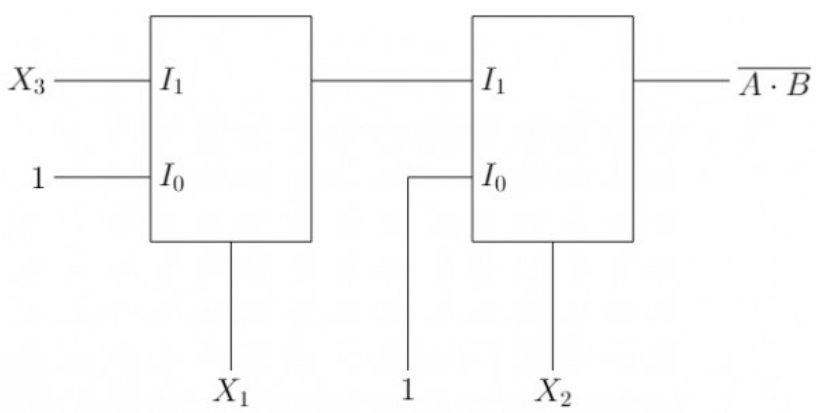

What are the values of X_1, X_2, X_3?

A. $X_1 = B, X_2 = 1, X_3 = 1$
B. $X_1 = A, X_2 = 0, X_3 = A$
C. $X_1 = A, X_2 = B, X_3 = 0$
D. $X_1 = B, X2 = 0, X_3 = A$

Your Answer: | Correct Answer: C | Not Attempted | Time taken: 00min 00sec | Discuss

Q #48 Numerical Type | Award: 2 | Penalty: 0 | Databases

Consider the following schedule

Schedule

T_1	T_2	T_3
$R(x)$		
	$R(x)$	
$W(y)$		
		$R(x)$
		$R(y)$
	$W(y)$	
		$W(x)$

The number of view equivalent serial schedules of the given schedule is _____

Your Answer: | Correct Answer: 0 | Not Attempted | Time taken: 00min 00sec | Discuss

Q #49 Numerical Type | Award: 2 | Penalty: 0 | Databases

The minimum numbers of relations required when the below ER diagram is converted to Relational model ensuring no redundancies is _____

Your Answer: | Correct Answer: 2 | Not Attempted | Time taken: 00min 00sec | Discuss

Q #50 Numerical Type | Award: 2 | Penalty: 0 | Databases

Consider a B-tree in which the search key is 16 bytes long, block size is 4096 bytes, data pointer is 4 bytes and block pointer is 8 bytes. The maximum order of B-tree will be _____

Your Answer: | Correct Answer: 147 | Not Attempted | Time taken: 00min 00sec | Discuss

Q #51 Multiple Select Type | Award: 2 | Penalty: 0 | Theory of Computation

Which of the following is/are regular grammar for the given finite automata? (Mark all the appropriate choices)

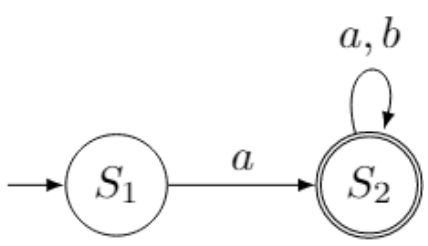

A. $S_1 \rightarrow aS_2$
$S_2 \rightarrow aS_2 \mid bS_2$

B. $S_1 \rightarrow aS_2$
$S_2 \rightarrow aS_2 \mid bS_2 \mid \varepsilon$

C. $S_1 \rightarrow S_2a$
$S_2 \rightarrow S_2a \mid S_2b \mid \varepsilon$

D. $S_1 \rightarrow S_1a \mid S_1b \mid S_2a$
$S_2 \rightarrow \varepsilon$

Your Answer: | Correct Answer: B;D | Not Attempted | Time taken: 00min 00sec | Discuss

Q #52 | Multiple Choice Type | Award: 2 | Penalty: 0.67 | Compiler Design

A shift reduce parser carries out the actions specified within braces immediately after reducing with the corresponding rule of grammar:

$S \rightarrow S + T \quad \{\text{print } (\text{"+"})\}$

$\quad |T \quad \{\ \}$

$T \rightarrow T * F \quad \{\text{print } (\text{"*"})\}$

$\quad |F \quad \{\ \}$

$F \rightarrow \text{num} \quad \{\text{print } (\text{num.val})\}$

What is the translation of $2 * 3 + 7$ using the syntax directed translation scheme described by the above rules?

A. $237 * +$
B. $23 * 7+$
C. $23 + 7*$
D. $+ * 237$

Your Answer: | Correct Answer: B | Not Attempted | Time taken: 00min 00sec | Discuss

Q #53 | Multiple Select Type | Award: 2 | Penalty: 0 | Theory of Computation

Consider the following languages.

- $L_1 = \{\langle M \rangle \mid M \text{ takes at least 2021 steps on some input}\}$,
- $L_2 = \{\langle M \rangle \mid M \text{ takes at most 2021 steps on all inputs}\}$ and
- $L_3 = \{\langle M \rangle \mid M \text{ accepts every string of length 21}\}$,

where for each Turing machine M, $\langle M \rangle$ denotes a specific encoding of M. Which one of the following is/are TRUE? (Mark all the appropriate choices)

A. L_1 is recursive and L_2 and L_3 are recursively enumerable
B. L_2 is recursive and L_1 and L_3 are not recursive
C. L_1 and L_2 are recursive and L_3 is not recursive
D. L_1, L_2, L_3 are recursively enumerable

Your Answer: | Correct Answer: A;C;D | Not Attempted | Time taken: 00min 00sec | Discuss

Q #54 | Numerical Type | Award: 2 | Penalty: 0 | CO & Architecture

Consider a 4-way set associative cache of size 16 KB and block size 64 bytes and using LRU replacement. Initially the cache is empty. The following sequence of access to memory blocks:

$$0, 64, 0, 256, 300, 32, 16, 257, 274, 24, 19, 12$$

is repeated 10 times. If the number of conflict misses and compulsory misses are A and B respectively, $2A + 3B =$ _____

Your Answer: | Correct Answer: 33 | Not Attempted | Time taken: 00min 00sec | Discuss

Q #55 | Multiple Select Type | Award: 2 | Penalty: 0 | Theory of Computation

Mark all the context-free languages given below. (Mark all the appropriate choices)

A. $L = \{x\#w \mid x, w \in \Sigma^* \text{ and } x \text{ is a substring of } w\}$
B. $L = \{a^n b^{n+m} c^{n+m} d^n \mid n, m \geq 0\}$
C. $L = \{xww_R \mid w \in (a+b)^*, x \in (a+b)^+\}$
D. $L = \{0^n 1^m 0^m 1^n \mid m, n \geq 0\}$

Your Answer: | Correct Answer: C;D | Not Attempted | Time taken: 00min 00sec | Discuss

Copyright & Stuff